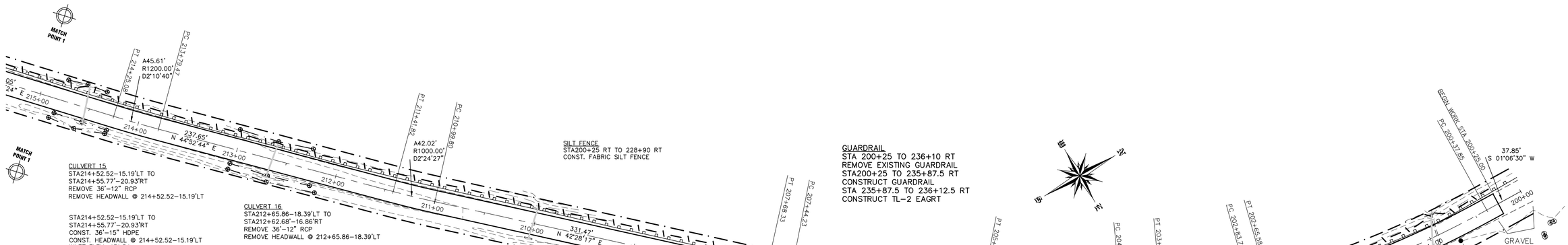


CULVERT 15
STA214+52.52–15.19'LT TO
STA214+55.77'–20.93'RT
REMOVE 36'–12" RCP
REMOVE HEADWALL @ 214+52.52–15.19'LT

STA214+52.52–15.19'LT TO
STA214+55.77'–20.93'RT
CONST. 36'–15" HDPE
CONST. HEADWALL @ 214+52.52–15.19'LT
INLET ELEV. 431.54
CONST. HEADWALL @ 214+55.77'–20.93'RT
OUTLET ELEV. 429.42

UNDERDRAIN
STA 214+55 TO STA 216+62 12'LT
CONSTRUCT 6"PE UNDERDRAIN
STA 214+55–15'LT
CONSTRUCT UNDERDRAIN HEADWALL
STA 216+62 14' LT
CONSTRUCT UNDERDRAIN FLUSHING BASIN

CULVERT 16
STA212+65.86–18.39'LT TO
STA212+62.68'–16.86'RT
REMOVE 36'–12" RCP
REMOVE HEADWALL @ 212+65.86–18.39'LT

STA212+65.86–18.39'LT TO
STA212+62.68'–16.86'RT
CONST. 36'–15" HDPE
CONST. HEADWALL @ 212+65.86–18.39'LT
INLET ELEV. 430.87
CONST. HEADWALL @ 212+62.68'–16.86'RT
OUTLET ELEV. 429.42

UNDERDRAIN
STA 212+68 TO STA 214+50 12'LT
CONSTRUCT 6"PE UNDERDRAIN
STA 212+68–15'LT
CONSTRUCT UNDERDRAIN HEADWALL
STA 214+50 14' LT
CONSTRUCT UNDERDRAIN FLUSHING BASIN

UNDERDRAIN
STA 210+05 TO STA 212+62 12'LT
CONSTRUCT 6"PE UNDERDRAIN
STA 210+05–15'LT
CONSTRUCT UNDERDRAIN HEADWALL
STA 212+62 14' LT
CONSTRUCT UNDERDRAIN FLUSHING BASIN

SILT FENCE
STA200+25 RT TO 228+90 RT
CONST. FABRIC SILT FENCE

CULVERT 17
STA210+02.88–15.89'LT TO
STA209+99.86'–17.77'RT
REMOVE 34'–15" RCP
REMOVE HEADWALL @ 210+02.88–15.89'LT

STA210+02.88–15.89'LT TO
STA209+99.86'–17.77'RT
CONST. 34'–15" HDPE
CONST. HEADWALL @ 210+02.88–15.89'LT
INLET ELEV. 429.92
CONST. HEADWALL @ 209+99.86'–17.77'RT
OUTLET ELEV. 429.24
MAINTAIN RIPRAP AROUND HEADWALL @ 209+99.86'–17.77'RT

UNDERDRAIN
STA 206+25 TO STA 209+97 12'LT
CONSTRUCT 6"PE UNDERDRAIN
STA 206+25–15'LT
CONSTRUCT UNDERDRAIN HEADWALL
STA 209+97 18' LT
CONSTRUCT UNDERDRAIN HEADWALL

GUARDRAIL
STA 200+25 TO 236+10 RT
REMOVE EXISTING GUARDRAIL
STA200+25 TO 235+87.5 RT
CONSTRUCT GUARDRAIL
STA 235+87.5 TO 236+12.5 RT
CONSTRUCT TL–2 EAGRT

CULVERT 18
STA206+19.82–17.60'LT TO
STA206+20.62'–20.89'RT
REMOVE 38'–15" RCP
REMOVE HEADWALL @ 206+19.82–17.60'LT

STA206+19.82–17.60'LT TO
STA206+20.62'–20.89'RT
CONST. 38'–15" HDPE
CONST. HEADWALL @ 206+19.82–17.60'LT
INLET ELEV. 430.66
CONST. HEADWALL @ 206+20.62'–20.89'RT
OUTLET ELEV. 428.05

UNDERDRAIN
STA 204+20 TO STA 206+15 12'LT
CONSTRUCT 6"PE UNDERDRAIN
STA 204+20–17'LT
CONSTRUCT UNDERDRAIN HEADWALL
STA 206+15 18' LT
CONSTRUCT UNDERDRAIN HEADWALL

CULVERT 19
STA204+25.24–18.63'LT TO
STA204+22.73'–20.73'RT
REMOVE 40'–15" RCP
REMOVE HEADWALL @ 204+25.24–18.63'LT

STA204+25.24–18.63'LT TO
STA204+22.73'–20.73'RT
CONST. 37'–15" HDPE
CONST. HEADWALL @ 204+25.24–18.63'LT
INLET ELEV. 430.50
CONST. HEADWALL @ 204+22.73'–20.73'RT
OUTLET ELEV. 430.00

UNDERDRAIN
STA 201+00 TO STA 204+20 12'LT
CONSTRUCT 6"PE UNDERDRAIN
STA 201+00–15'LT
CONSTRUCT UNDERDRAIN HEADWALL
STA 204+20 14' LT
CONSTRUCT UNDERDRAIN FLUSHING BASIN

CULVERT 20
STA200+95.18–17.48'LT TO
STA200+88.34'–22.60'RT
REMOVE 40'–18" RCP
REMOVE COVER & FILL STRUCTURE @200+95.18–17.48'LT
USE CAUTION TO PROTECT TREE
REMOVE HEADWALL @200+88.34'–22.60'RT

STA201+05.00–17.00'LT TO
STA200+88.34'–22.60'RT
CONST. 40'–18" HDPE
CONST. HEADWALL @ 201+05.00–17.00'LT
INLET ELEV. 427.00
CONST. HEADWALL @ 200+88.34'–22.60'RT
OUTLET ELEV. 423.20

GRAPHIC SCALE
50 0 20 50 100 200
( IN FEET )
1 inch = 50 ft.

## ROADWAY PLAN
SCALE: 1"= 50'

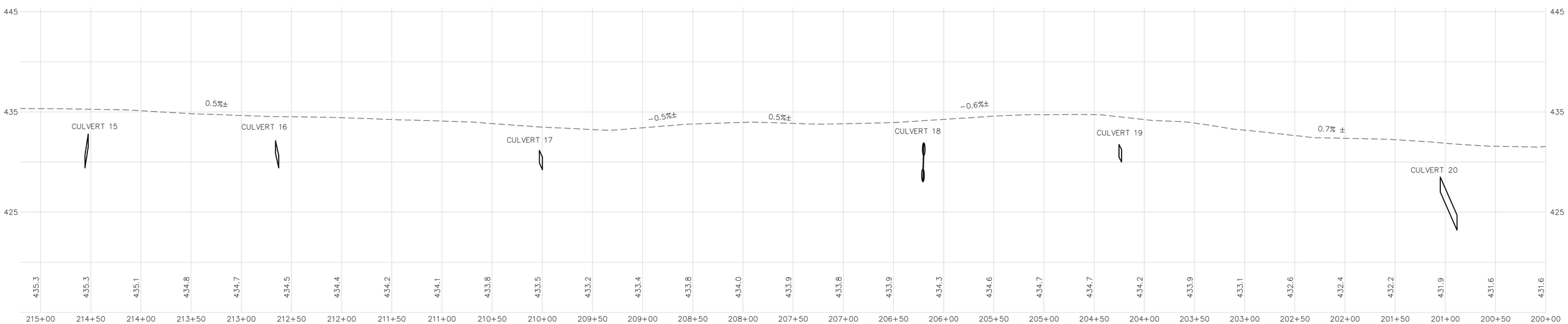


## ROADWAY PROFILE
SCALE: 1"= 50'H; 1"= 5'V

## LEGEND

- DECIDUOUS TREE
- SURVEY CONTROL POINT
- IRON PIPE
- BENCH MARK
- DRILL HOLE
- GRANITE BOUND (existing)
- GUY LINE ANCHOR
- MAIN HOLE
- WETLAND FLAG
- SIGN (labled)
- MAIL BOX
- UTILITY POLE
- 510 CONTOUR
- STONEWALL
- GUARD RAIL
- FABRIC SILT FENCE

GENERAL NOTES:

1.) SURVEY BY TOTAL STATION IN APRIL, 2016.
2.) NORTH ORIENTATION BASED ON NH GRID COORDINATES
3.) VERTICAL DATUM BASED ON NAVD88
4.) THIS IS NOT TO BE CONSIDERED A COMPLETE SURVEY OF THE RIGHT OF WAY OF WESTERN AVE. MONUMENTS AND IMPROVEMENTS WERE LOCATED FOR REFERENCE ONLY, TO BE USED FOR THE RE–SURFACING OF THIS PORTION OF WESTERN AVE.
5.) THE CENTERLINE OF WESTERN AVE IS SHOWN AS A BEST FIT OF THE EXISTING PAVED ROADWAY, AND AN OFFSET LINE OF 25' LEFT AND RIGHT SHOWN AS A TYPICAL 50' RIGHT OF WAY. NO LAYOUT FOR WESTERN AVE WAS RESEARCHED FOR THIS PROJECT.
6.)CONSTRUCTION OF THE DITCH LINES TO POSITIVELY DRAIN TO A CULVERT.
7.)FINAL RECLAIMED PAVEMENT/GRAVEL CROWNED FINISH GRADE TO BE LEFT 4" BELOW EXISTING GRADE TO ACCOMMODATE FOR PAVING IN 2018. PROVIDE GRADED APRONS TO ACCESS POINTS EITHER WESTERN AVENUE OR EXISTING DRIVEWAYS
8.)ALL ROADWAY SIGNS TO BE PRESERVED

811 DigSafe MA.ME.NH.RI.VT

STATE OF NEW HAMPSHIRE JENNIFER B. McCOURT No. 8133 LICENSED PROFESSIONAL ENGINEER

REVISIONS:

| # | DATE | DESCRIPTION | BY |
|---|---|---|---|
| | | | |

STA 200+00 TO STA 215+00 ROAD PLAN & PROFILE
**WESTERN AVENUE RECONSTRUCTION**
COTE HILL ROAD TO PATTERSON ROAD EXTENSION
HENNIKER, NH

OWNER: TOWN OF HENNIKER
18 DEPOT STREET
HENNIKER, NH 03242

SURVEYOR:
J.E. BELANGER LAND SURVEYING PLLC
LICENSED LAND SURVEYOR
61 OLD HOPKINTON ROAD, DEERFIELD, NH 03046
* BOUNDARY SURVEYS
* SUBDIVISIONS
* LAND PLANNING
* SEPTIC DESIGN
TEL. (603) 774-3001

ENGINEER:
McCOURT ENGINEERING ASSOCIATES, PLLC
Civil Engineering & Land Planning
42 Ezekiel Smith Road,Henniker, NH 03242
mccourtengineering@tds.net
(603) 428–6682

PROJECT# 215–0814–1 | DATE: 05/30/16 | SCALE: AS SHOWN | SHEET 4 OF 11

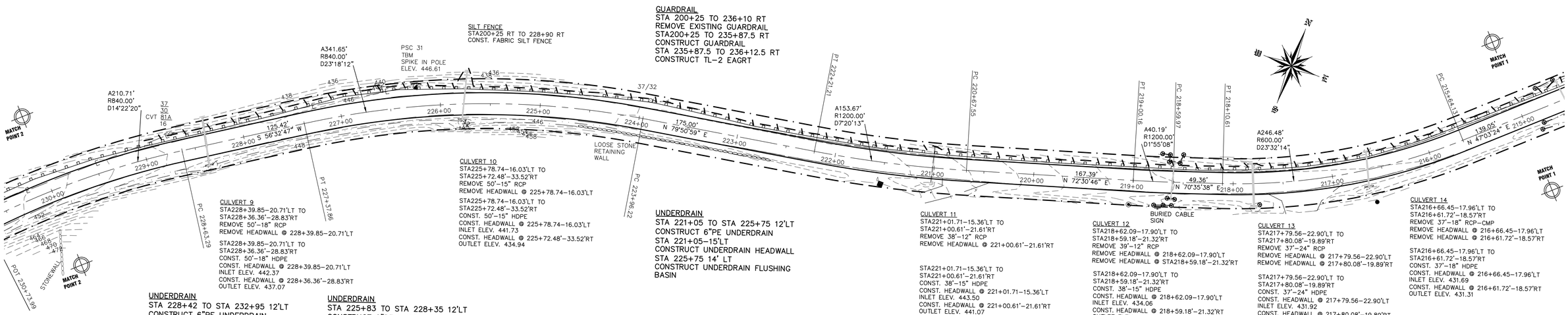


GRAPHIC SCALE

50 0 20 50 100 200

( IN FEET )
1 inch = 50 ft.

## ROADWAY PLAN

*SCALE: 1"= 50'*

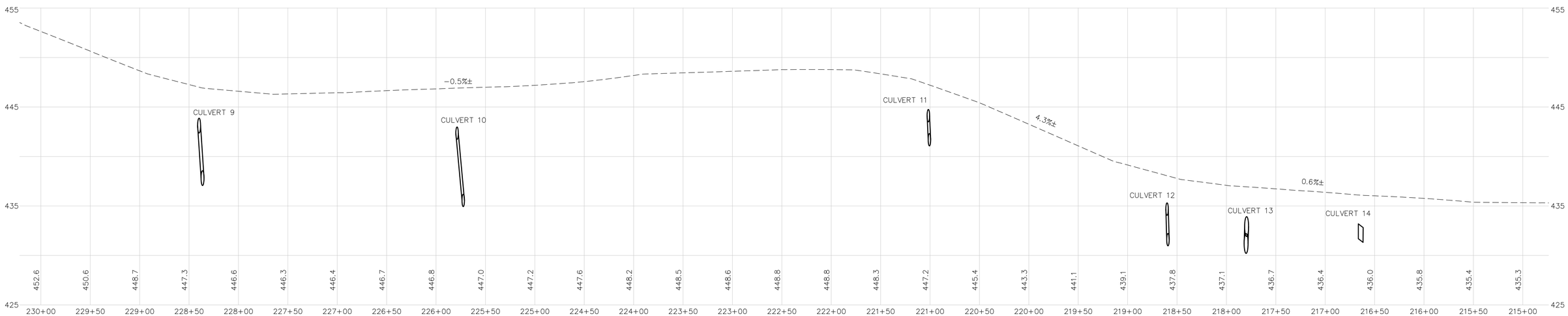


## ROADWAY PROFILE

*SCALE: 1"= 50'H; 1"= 5'V*

## LEGEND

- DECIDUOUS TREE
- SURVEY CONTROL POINT
- IRON PIPE
- BENCH MARK
- DRILL HOLE
- GRANITE BOUND (existing)
- GUY LINE ANCHOR
- MAIN HOLE
- WETLAND FLAG
- SIGN (labled)
- MAIL BOX
- UTILITY POLE
- 510 CONTOUR
- STONEWALL
- GUARD RAIL
- FABRIC SILT FENCE

**GENERAL NOTES:**

1.) SURVEY BY TOTAL STATION IN APRIL, 2016.
2.) NORTH ORIENTATION BASED ON NH GRID COORDINATES
3.) VERTICAL DATUM BASED ON NAVD88
4.) THIS IS NOT TO BE CONSIDERED A COMPLETE SURVEY OF THE RIGHT OF WAY OF WESTERN AVE. MONUMENTS AND IMPROVEMENTS WERE LOCATED FOR REFERENCE ONLY, TO BE USED FOR THE RE-SURFACING OF THIS PORTION OF WESTERN AVE.
5.) THE CENTERLINE OF WESTERN AVE IS SHOWN AS A BEST FIT OF THE EXISTING PAVED ROADWAY, AND AN OFFSET LINE OF 25' LEFT AND RIGHT SHOWN AS A TYPICAL 50' RIGHT OF WAY. NO LAYOUT FOR WESTERN AVE WAS RESEARCHED FOR THIS PROJECT.
6.) CONSTRUCTION OF THE DITCH LINES TO POSITIVELY DRAIN TO A CULVERT.
7.) FINAL RECLAIMED PAVEMENT/GRAVEL CROWNED FINISH GRADE TO BE LEFT 4" BELOW EXISTING GRADE TO ACCOMMODATE FOR PAVING IN 2018. PROVIDE GRADED APRONS TO ACCESS POINTS EITHER WESTERN AVENUE OR EXISTING DRIVEWAYS
8.) ALL ROADWAY SIGNS TO BE PRESERVED

DigSafe MA-ME-NH-RI-VT

STATE OF NEW HAMPSHIRE JENNIFER B. McCOURT No. 8133 LICENSED PROFESSIONAL ENGINEER

REVISIONS:

| # | DATE | DESCRIPTION | BY |
|---|---|---|---|
| | | | |

STA 215+00 TO STA 230+00 ROAD PLAN & PROFILE

# WESTERN AVENUE RECONSTRUCTION

COTE HILL ROAD TO PATTERSON ROAD EXTENSION
HENNIKER, NH

**OWNER:** TOWN OF HENNIKER
18 DEPOT STREET
HENNIKER, NH 03242


SURVEYOR:
J.E. BELANGER LAND SURVEYING PLLC
LICENSED LAND SURVEYOR
15 GREENHOUSE LANE, SUTTON, NEW HAMPSHIRE 03273, NH 03046
* BOUNDARY SURVEYS
* SUBDIVISIONS
* LAND PLANNING
* SEPTIC DESIGN
TEL (603) 774-3601

ENGINEER:
McCOURT ENGINEERING ASSOCIATES, PLLC
Civil Engineering & Land Planning
42 Ezekiel Smith Road,Henniker, NH 03242
mccourtengineering@tds.net
(603) 428-6682


PROJECT# 215-0814-1 | DATE: 05/30/16 | SCALE: AS SHOWN | SHEET 5 OF 11

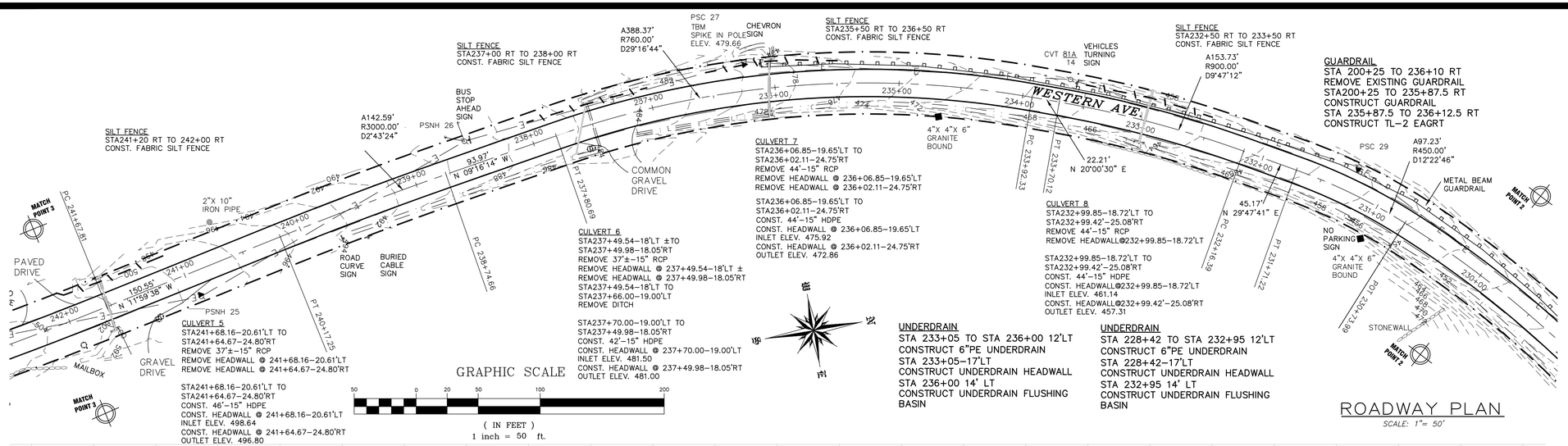


ROADWAY PLAN

*SCALE: 1"= 50'*

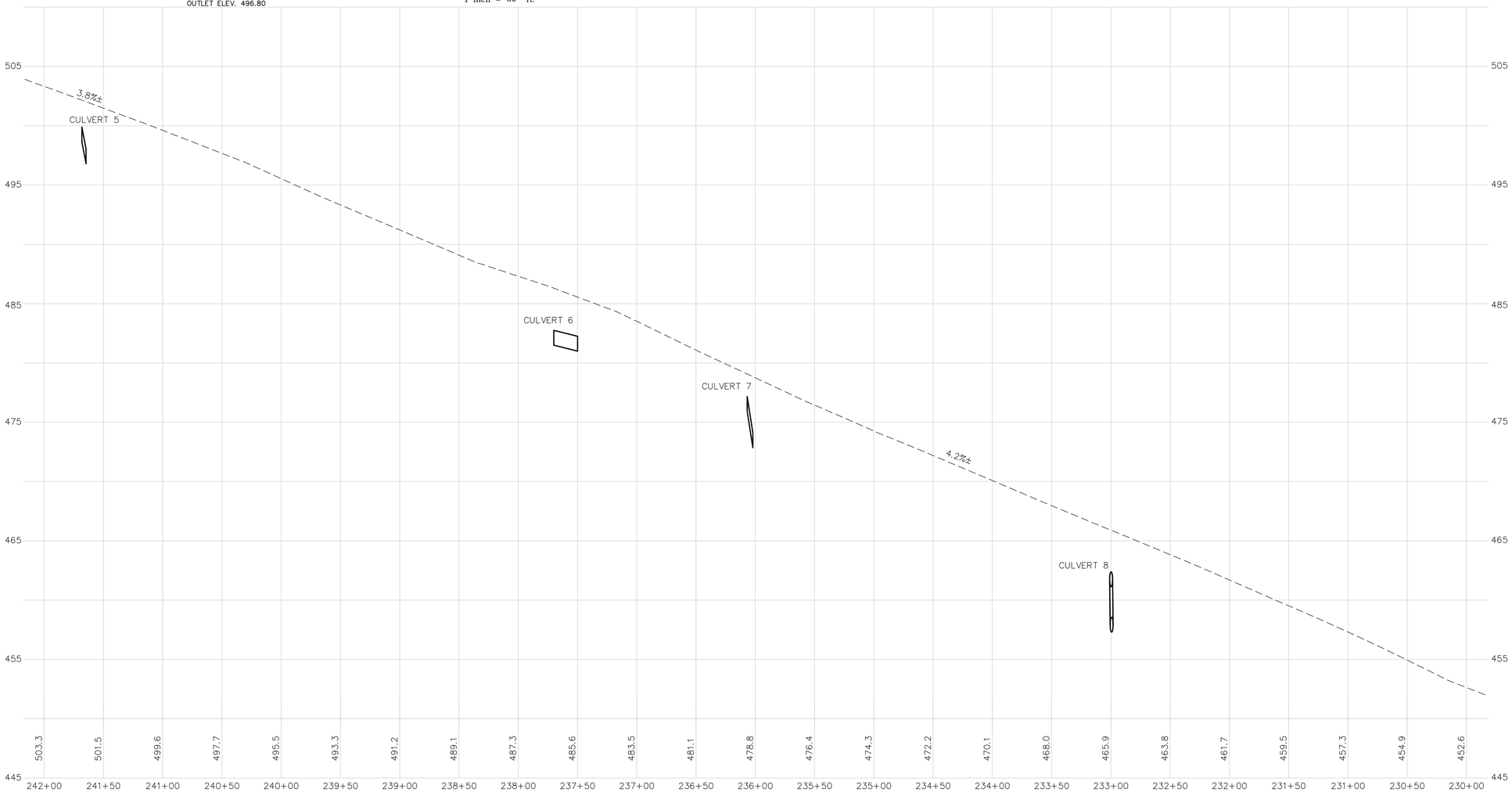


ROADWAY PROFILE

*SCALE: 1"= 50'H; 1"= 5'V*

## LEGEND

- DECIDUOUS TREE
- SURVEY CONTROL POINT
- IRON PIPE
- BENCH MARK
- DRILL HOLE
- GRANITE BOUND (existing)
- GUY LINE ANCHOR
- MAIN HOLE
- WETLAND FLAG
- SIGN (labled)
- MAIL BOX
- UTILITY POLE
- 510 — CONTOUR
- STONEWALL
- GUARD RAIL
- FABRIC SILT FENCE

GENERAL NOTES:

1.) SURVEY BY TOTAL STATION IN APRIL, 2016.
2.) NORTH ORIENTATION BASED ON NH GRID COORDINATES
3.) VERTICAL DATUM BASED ON NAVD88
4.) THIS IS NOT TO BE CONSIDERED A COMPLETE SURVEY OF THE RIGHT OF WAY OF WESTERN AVE. MONUMENTS AND IMPROVEMENTS WERE LOCATED FOR REFERENCE ONLY, TO BE USED FOR THE RE-SURFACING OF THIS PORTION OF WESTERN AVE.
5.) THE CENTERLINE OF WESTERN AVE IS SHOWN AS A BEST FIT OF THE EXISTING PAVED ROADWAY, AND AN OFFSET LINE OF 25' LEFT AND RIGHT SHOWN AS A TYPICAL 50' RIGHT OF WAY. NO LAYOUT FOR WESTERN AVE WAS RESEARCHED FOR THIS PROJECT.
6.) CONSTRUCTION OF THE DITCH LINES TO POSITIVELY DRAIN TO A CULVERT.
7.) FINAL RECLAIMED PAVEMENT/GRAVEL CROWNED FINISH GRADE TO BE LEFT 4" BELOW EXISTING GRADE TO ACCOMMODATE FOR PAVING IN 2018. PROVIDE GRADED APRONS TO ACCESS POINTS EITHER WESTERN AVENUE OR EXISTING DRIVEWAYS
8.) ALL ROADWAY SIGNS TO BE PRESERVED

811 DigSafe MA-ME-NH-RI-VT

STATE OF NEW HAMPSHIRE JENNIFER B. McCOURT No. 8133 LICENSED PROFESSIONAL ENGINEER

REVISIONS:

| # | DATE | DESCRIPTION | BY |
|---|---|---|---|
| | | | |

STA 230+00 TO STA 241+00 ROAD PLAN & PROFILE

**WESTERN AVENUE RECONSTRUCTION**

COTE HILL ROAD TO PATTERSON ROAD EXTENSION
HENNIKER, NH

OWNER: TOWN OF HENNIKER
18 DEPOT STREET
HENNIKER, NH 03242

SURVEYOR:
J.E. BELANGER LAND SURVEYING PLLC
LICENSED LAND SURVEYOR
167 CONCORD STREET, CONCORD, NEW HAMPSHIRE, NH 03046
* BOUNDARY SURVEYS
* SUBDIVISIONS
* LAND PLANNING
* SEPTIC DESIGN
TEL (603) 774-3601

ENGINEER:
McCOURT ENGINEERING ASSOCIATES, PLLC
Civil Engineering & Land Planning
42 Ezekiel Smith Road,Henniker, NH 03242
mccourtengineering@tds.net
(603) 428-6682

| PROJECT# 215-0814-1 | DATE: 05/30/16 | SCALE: AS SHOWN | SHEET 6 OF 11 |
|---|---|---|---|

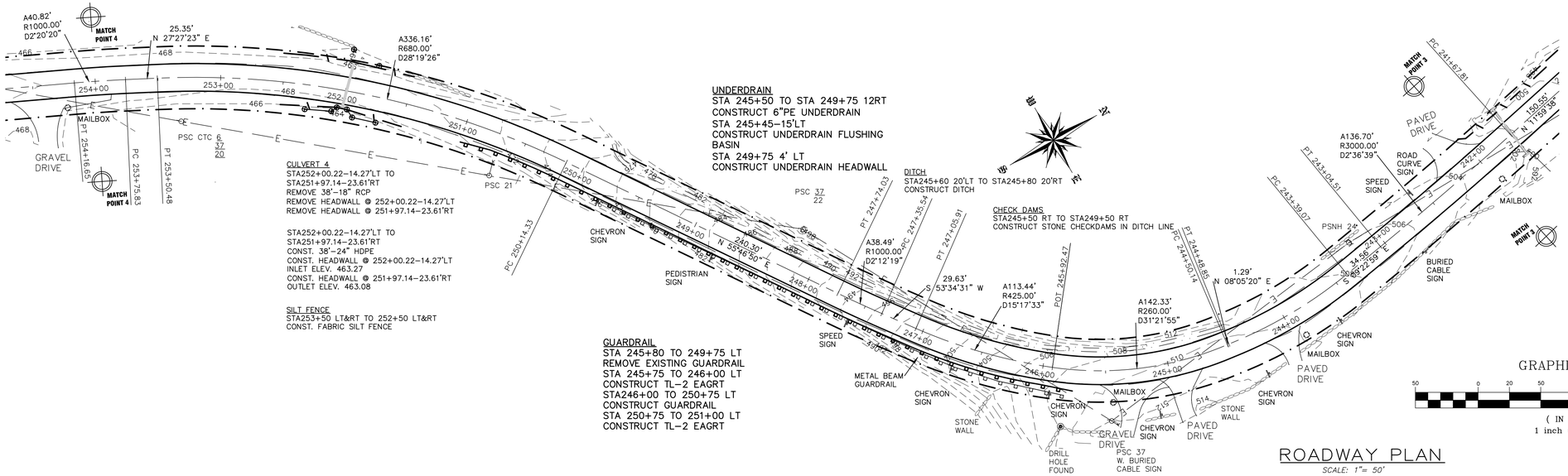


ROADWAY PLAN

SCALE: 1"= 50'

## LEGEND

- DECIDUOUS TREE
- SURVEY CONTROL POINT
- IRON PIPE
- BENCH MARK
- DRILL HOLE
- GRANITE BOUND (existing)
- GUY LINE ANCHOR
- MAIN HOLE
- WETLAND FLAG
- SIGN (labled)
- MAIL BOX
- UTILITY POLE
- 510 — CONTOUR
- STONEWALL
- GUARD RAIL
- FABRIC SILT FENCE

GRAPHIC SCALE

50 0 20 50 100 200

( IN FEET )
1 inch = 50 ft.

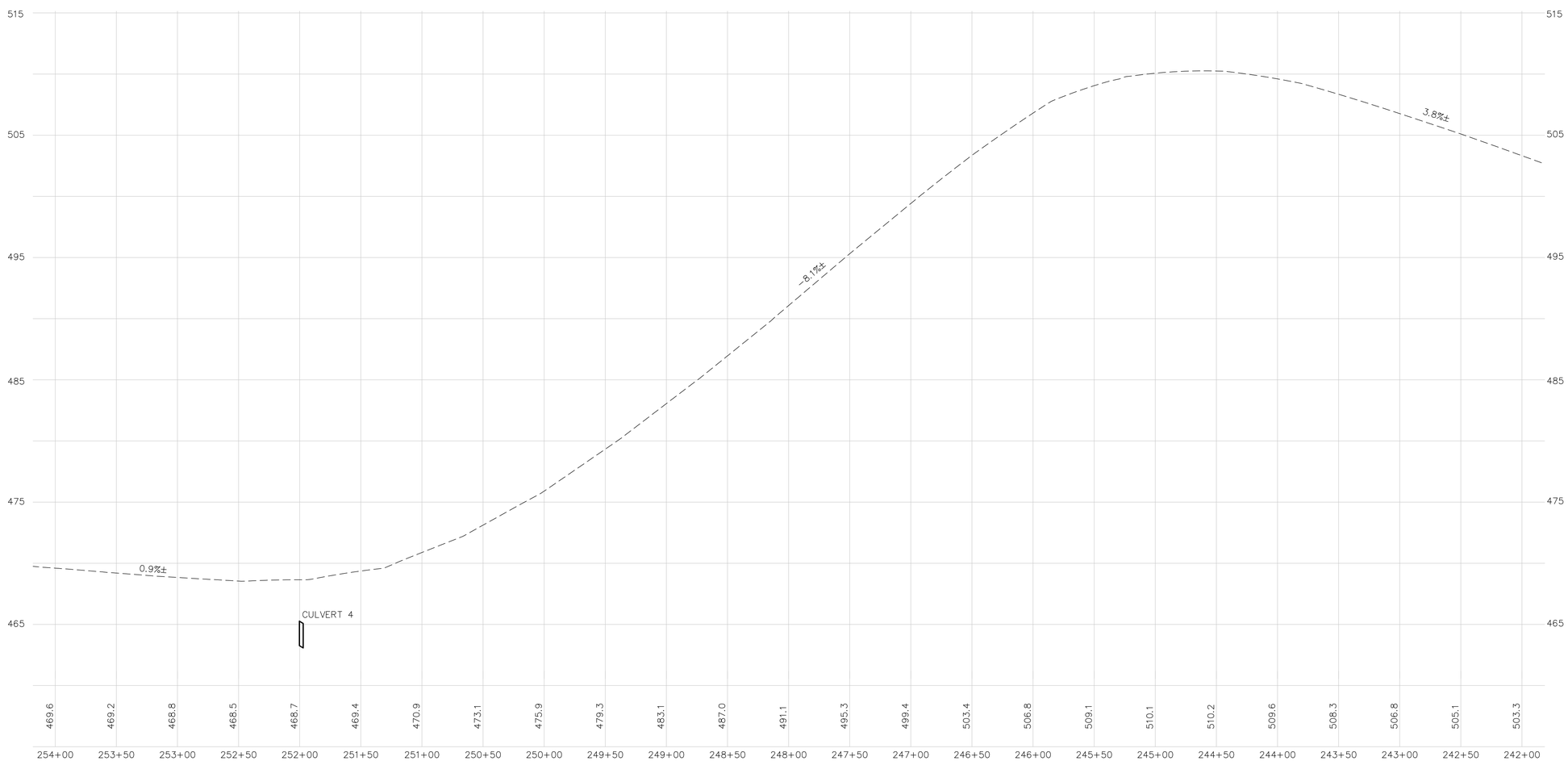


ROADWAY PROFILE

SCALE: 1"= 50'H; 1"= 5'V

**GENERAL NOTES:**

1.) SURVEY BY TOTAL STATION IN APRIL, 2016.
2.) NORTH ORIENTATION BASED ON NH GRID COORDINATES
3.) VERTICAL DATUM BASED ON NAVD88
4.) THIS IS NOT TO BE CONSIDERED A COMPLETE SURVEY OF THE RIGHT OF WAY OF WESTERN AVE. MONUMENTS AND IMPROVEMENTS WERE LOCATED FOR REFERENCE ONLY, TO BE USED FOR THE RE-SURFACING OF THIS PORTION OF WESTERN AVE.
5.) THE CENTERLINE OF WESTERN AVE IS SHOWN AS A BEST FIT OF THE EXISTING PAVED ROADWAY, AND AN OFFSET LINE OF 25' LEFT AND RIGHT SHOWN AS A TYPICAL 50' RIGHT OF WAY. NO LAYOUT FOR WESTERN AVE WAS RESEARCHED FOR THIS PROJECT.
6.) CONSTRUCTION OF THE DITCH LINES TO POSITIVELY DRAIN TO A CULVERT.
7.) FINAL RECLAIMED PAVEMENT/GRAVEL CROWNED FINISH GRADE TO BE LEFT 4" BELOW EXISTING GRADE TO ACCOMMODATE FOR PAVING IN 2018. PROVIDE GRADED APRONS TO ACCESS POINTS EITHER WESTERN AVENUE OR EXISTING DRIVEWAYS
8.) ALL ROADWAY SIGNS TO BE PRESERVED

811 DigSafe MA.ME.NH.RI.VT

STATE OF NEW HAMPSHIRE JENNIFER B. McCOURT No. 8133 LICENSED PROFESSIONAL ENGINEER

REVISIONS:

| # | DATE | DESCRIPTION | BY |
|---|---|---|---|
| | | | |

STA 241+00 TO STA 254+00 ROAD PLAN & PROFILE

# WESTERN AVENUE RECONSTRUCTION

COTE HILL ROAD TO PATTERSON ROAD EXTENSION
HENNIKER, NH

**OWNER:** TOWN OF HENNIKER
18 DEPOT STREET
HENNIKER, NH 03242

SURVEYOR:
J.E. BELANGER LAND SURVEYING PLLC
LICENSED LAND SURVEYOR
81 OLD HOPKINTON ROAD DEERFIELD, NH 03046
* BOUNDARY SURVEYS
* SUBDIVISIONS
* LAND PLANNING
* SEPTIC DESIGN
TEL (603) 774-3601

ENGINEER:
McCOURT ENGINEERING ASSOCIATES, PLLC
Civil Engineering & Land Planning
42 Ezekiel Smith Road,Henniker, NH 03242
mccourtengineering@tds.net
(603) 428-6682

| PROJECT# 215-0814-1 | DATE: 05/30/16 | SCALE: AS SHOWN | SHEET 7 OF 11 |
|---|---|---|---|

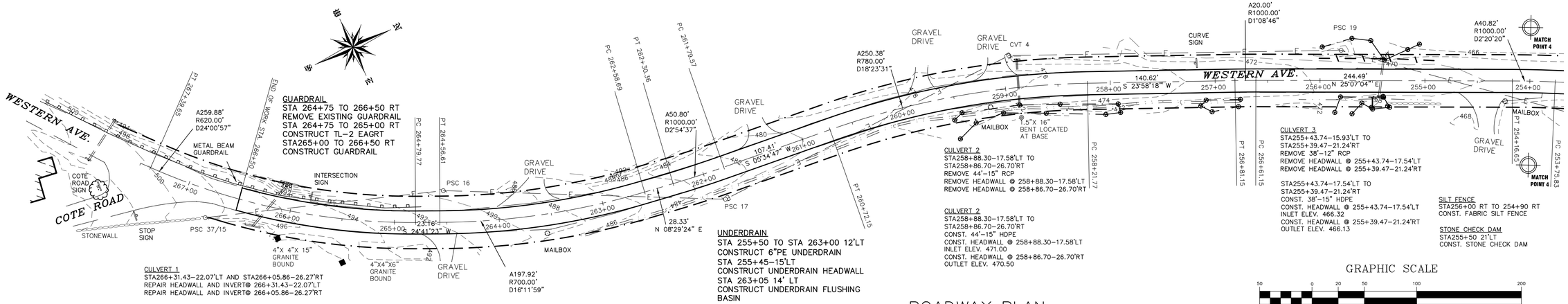


## ROADWAY PLAN

*SCALE: 1"= 50'*

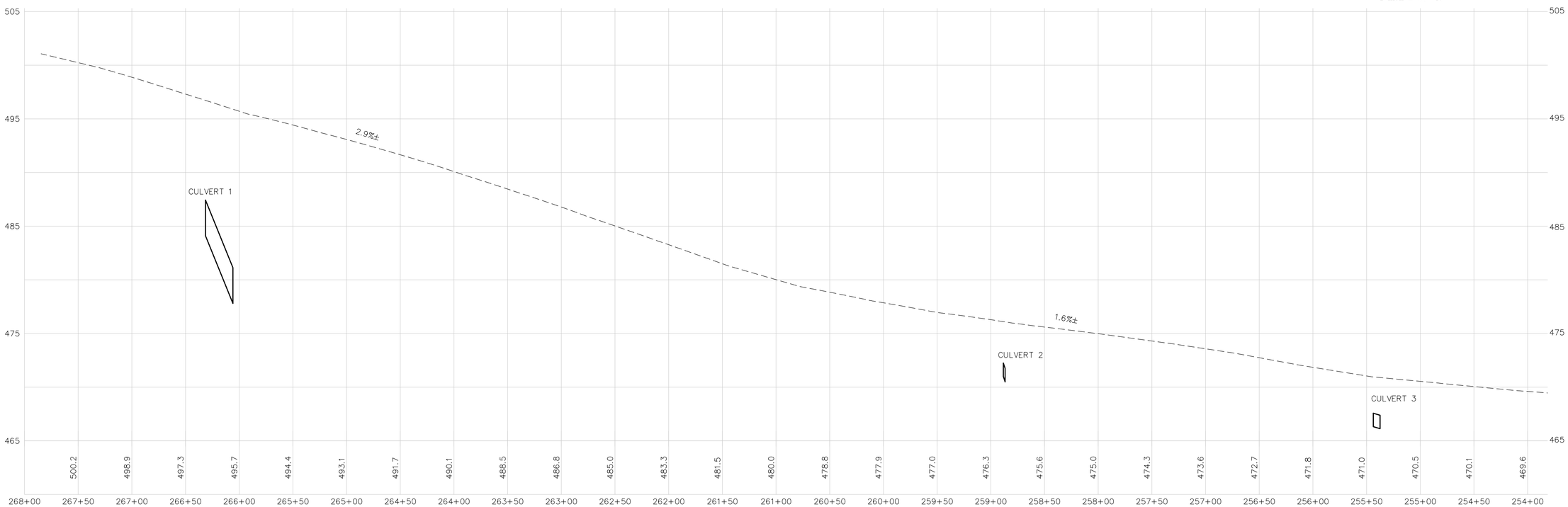


## ROADWAY PROFILE

*SCALE: 1"= 50'H; 1"= 5'V*

## LEGEND

- DECIDUOUS TREE
- SURVEY CONTROL POINT
- IRON PIPE
- BENCH MARK
- DRILL HOLE
- GRANITE BOUND (existing)
- GUY LINE ANCHOR
- MAIN HOLE
- WETLAND FLAG
- SIGN (labled)
- MAIL BOX
- UTILITY POLE
- 510 CONTOUR
- STONEWALL
- GUARD RAIL
- FABRIC SILT FENCE

**GENERAL NOTES:**

1.) SURVEY BY TOTAL STATION IN APRIL, 2016.
2.) NORTH ORIENTATION BASED ON NH GRID COORDINATES
3.) VERTICAL DATUM BASED ON NAVD88
4.) THIS IS NOT TO BE CONSIDERED A COMPLETE SURVEY OF THE RIGHT OF WAY OF WESTERN AVE. MONUMENTS AND IMPROVEMENTS WERE LOCATED FOR REFERENCE ONLY, TO BE USED FOR THE RE-SURFACING OF THIS PORTION OF WESTERN AVE.
5.) THE CENTERLINE OF WESTERN AVE IS SHOWN AS A BEST FIT OF THE EXISTING PAVED ROADWAY, AND AN OFFSET LINE OF 25' LEFT AND RIGHT SHOWN AS A TYPICAL 50' RIGHT OF WAY. NO LAYOUT FOR WESTERN AVE WAS RESEARCHED FOR THIS PROJECT.
6.) CONSTRUCTION OF THE DITCH LINES TO POSITIVELY DRAIN TO A CULVERT.
7.) FINAL RECLAIMED PAVEMENT/GRAVEL CROWNED FINISH GRADE TO BE LEFT 4" BELOW EXISTING GRADE TO ACCOMMODATE FOR PAVING IN 2018. PROVIDE GRADED APRONS TO ACCESS POINTS EITHER WESTERN AVENUE OR EXISTING DRIVEWAYS
8.) ALL ROADWAY SIGNS TO BE PRESERVED

811 DigSafe MA·ME·NH·RI·VT

STATE OF NEW HAMPSHIRE
JENNIFER B. McCOURT No. 8133
11/21/16
LICENSED PROFESSIONAL ENGINEER

REVISIONS:

| # | DATE | DESCRIPTION | BY |
|---|---|---|---|
| 1 | 11/21/16 | REVISE CULVERTS 2&3 | JBM |

STA 254+00 TO 267+84.58 ROAD PLAN & PROFILE

# WESTERN AVENUE RECONSTRUCTION

COTE HILL ROAD TO PATTERSON ROAD EXTENSION
HENNIKER, NH

**OWNER:** TOWN OF HENNIKER
18 DEPOT STREET
HENNIKER, NH 03242

SURVEYOR:
J.E. BELANGER LAND SURVEYING PLLC
LICENSED LAND SURVEYOR
111 BELLEVUE AVENUE, CONCORD, NH 03046
* BOUNDARY SURVEYS
* SUBDIVISIONS
* LAND PLANNING
* SEPTIC DESIGN
TEL (603) 774-3601

ENGINEER:
McCOURT ENGINEERING ASSOCIATES, PLLC
Civil Engineering & Land Planning
42 Ezekiel Smith Road,Henniker, NH 03242
mccourtengineering@tds.net
(603) 428-6682

PROJECT# 215-0814-1 | DATE: 05/30/16 | SCALE: AS SHOWN | SHEET 8 OF 11

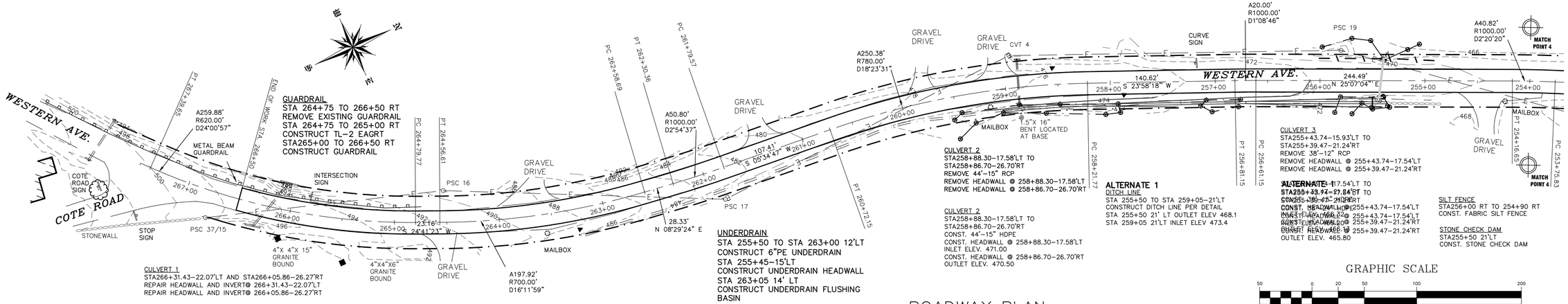


**GUARDRAIL**
STA 264+75 TO 266+50 RT
REMOVE EXISTING GUARDRAIL
STA 264+75 TO 265+00 RT
CONSTRUCT TL-2 EAGRT
STA265+00 TO 266+50 RT
CONSTRUCT GUARDRAIL

**CULVERT 1**
STA266+31.43-22.07'LT AND STA266+05.86-26.27'RT
REPAIR HEADWALL AND INVERT@ 266+31.43-22.07'LT
REPAIR HEADWALL AND INVERT@ 266+05.86-26.27'RT

**UNDERDRAIN**
STA 255+50 TO STA 263+00 12'LT
CONSTRUCT 6"PE UNDERDRAIN
STA 255+45-15'LT
CONSTRUCT UNDERDRAIN HEADWALL
STA 263+05 14' LT
CONSTRUCT UNDERDRAIN FLUSHING BASIN

**CULVERT 2**
STA258+88.30-17.58'LT TO
STA258+86.70-26.70'RT
REMOVE 44'-15" RCP
REMOVE HEADWALL @ 258+88.30-17.58'LT
REMOVE HEADWALL @ 258+86.70-26.70'RT

**CULVERT 2**
STA258+88.30-17.58'LT TO
STA258+86.70-26.70'RT
CONST. 44'-15" HDPE
CONST. HEADWALL @ 258+88.30-17.58'LT
INLET ELEV. 471.00
CONST. HEADWALL @ 258+86.70-26.70'RT
OUTLET ELEV. 470.50

**ALTERNATE 1**
DITCH LINE
STA 255+50 TO STA 259+05-21'LT
CONSTRUCT DITCH LINE PER DETAIL
STA 255+50 21' LT OUTLET ELEV 468.1
STA 259+05 21'LT INLET ELEV 473.4

**CULVERT 3**
STA255+43.74-15.93'LT TO
STA255+39.47-21.24'RT
REMOVE 38'-12" RCP
REMOVE HEADWALL @ 255+43.74-17.54'LT
REMOVE HEADWALL @ 255+39.47-21.24'RT

**ALTERNATE 1**
STA255+43.74-17.54'LT TO
STA255+39.47-21.24'RT
CONST. 38'-12" HDPE
CONST. HEADWALL @ 255+43.74-17.54'LT
INLET ELEV. 468.20
CONST. HEADWALL @ 255+39.47-21.24'RT
OUTLET ELEV. 465.80

**SILT FENCE**
STA256+00 RT TO 254+90 RT
CONST. FABRIC SILT FENCE

**STONE CHECK DAM**
STA255+50 21'LT
CONST. STONE CHECK DAM

## ROADWAY PLAN

*SCALE: 1"= 50'*

GRAPHIC SCALE

50 0 20 50 100 200

( IN FEET )
1 inch = 50 ft.

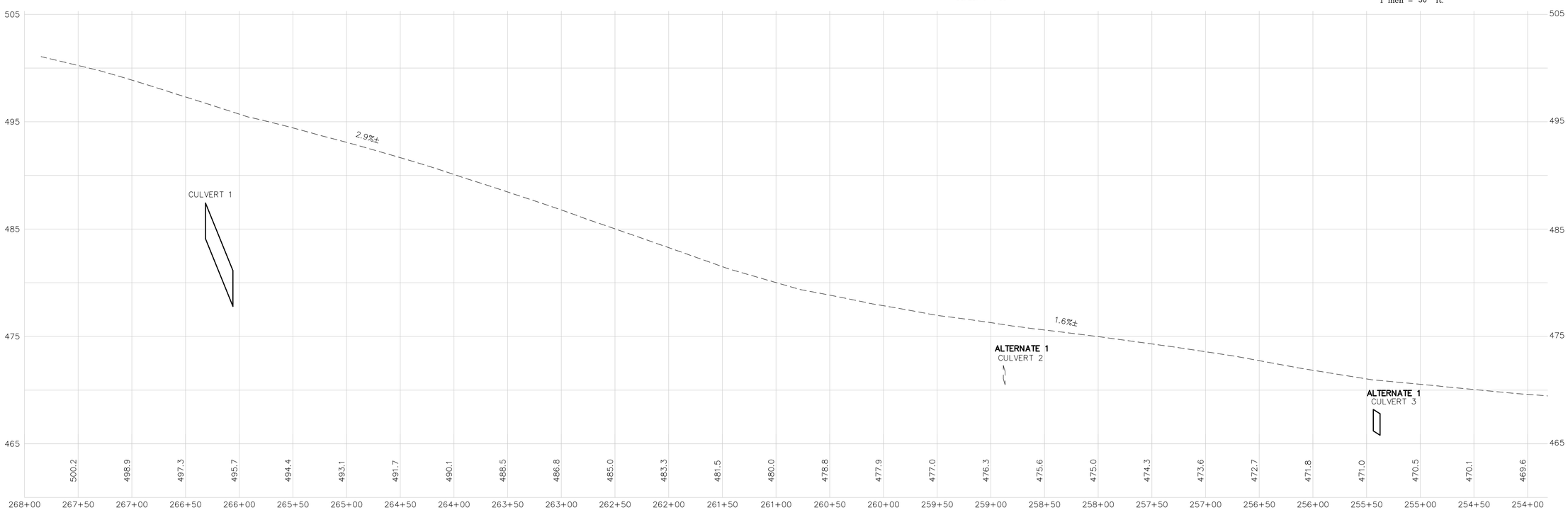


## ROADWAY PROFILE

*SCALE: 1"= 50'H; 1"= 5'V*

## LEGEND

- DECIDUOUS TREE
- SURVEY CONTROL POINT
- IRON PIPE
- BENCH MARK
- DRILL HOLE
- GRANITE BOUND (existing)
- GUY LINE ANCHOR
- MAIN HOLE
- WETLAND FLAG
- SIGN (labled)
- MAIL BOX
- UTILITY POLE
- 510 CONTOUR
- STONEWALL
- GUARD RAIL
- FABRIC SILT FENCE

**GENERAL NOTES:**

1.) SURVEY BY TOTAL STATION IN APRIL, 2016.
2.) NORTH ORIENTATION BASED ON NH GRID COORDINATES
3.) VERTICAL DATUM BASED ON NAVD88
4.) THIS IS NOT TO BE CONSIDERED A COMPLETE SURVEY OF THE RIGHT OF WAY OF WESTERN AVE. MONUMENTS AND IMPROVEMENTS WERE LOCATED FOR REFERENCE ONLY, TO BE USED FOR THE RE-SURFACING OF THIS PORTION OF WESTERN AVE.
5.) THE CENTERLINE OF WESTERN AVE IS SHOWN AS A BEST FIT OF THE EXISTING PAVED ROADWAY, AND AN OFFSET LINE OF 25' LEFT AND RIGHT SHOWN AS A TYPICAL 50' RIGHT OF WAY. NO LAYOUT FOR WESTERN AVE WAS RESEARCHED FOR THIS PROJECT.
6.) CONSTRUCTION OF THE DITCH LINES TO POSITIVELY DRAIN TO A CULVERT.
7.) FINAL RECLAIMED PAVEMENT/GRAVEL CROWNED FINISH GRADE TO BE LEFT 4" BELOW EXISTING GRADE TO ACCOMMODATE FOR PAVING IN 2018. PROVIDE GRADED APRONS TO ACCESS POINTS EITHER WESTERN AVENUE OR EXISTING DRIVEWAYS
8.) ALL ROADWAY SIGNS TO BE PRESERVED

811 DigSafe MA·ME·NH·RI·VT

STATE OF NEW HAMPSHIRE – JENNIFER B. McCOURT No. 8133 – LICENSED PROFESSIONAL ENGINEER – 11/21/16

REVISIONS:

| # | DATE | DESCRIPTION | BY |
|---|---|---|---|
| | | | |

**ALTERNATE 1**
STA 254+00 TO 267+84.58 ROAD PLAN & PROFILE
**WESTERN AVENUE RECONSTRUCTION**
COTE HILL ROAD TO PATTERSON ROAD EXTENSION
HENNIKER, NH

OWNER: TOWN OF HENNIKER
18 DEPOT STREET
HENNIKER, NH 03242


SURVEYOR:
J.E. BELANGER LAND SURVEYING PLLC
LICENSED LAND SURVEYOR
111 HOPKINTON ROAD, CONCORD, NH 03046
TEL (603) 774-3601
* BOUNDARY SURVEYS
* SUBDIVISIONS
* LAND PLANNING
* SEPTIC DESIGN

ENGINEER:
McCOURT ENGINEERING ASSOCIATES, PLLC
Civil Engineering & Land Planning
42 Ezekiel Smith Road,Henniker, NH 03242
mccourtengineering@tds.net
(603) 428-6682


PROJECT# 215-0814-1 | DATE: 11/21/16 | SCALE: AS SHOWN | SHEET 9 OF 11

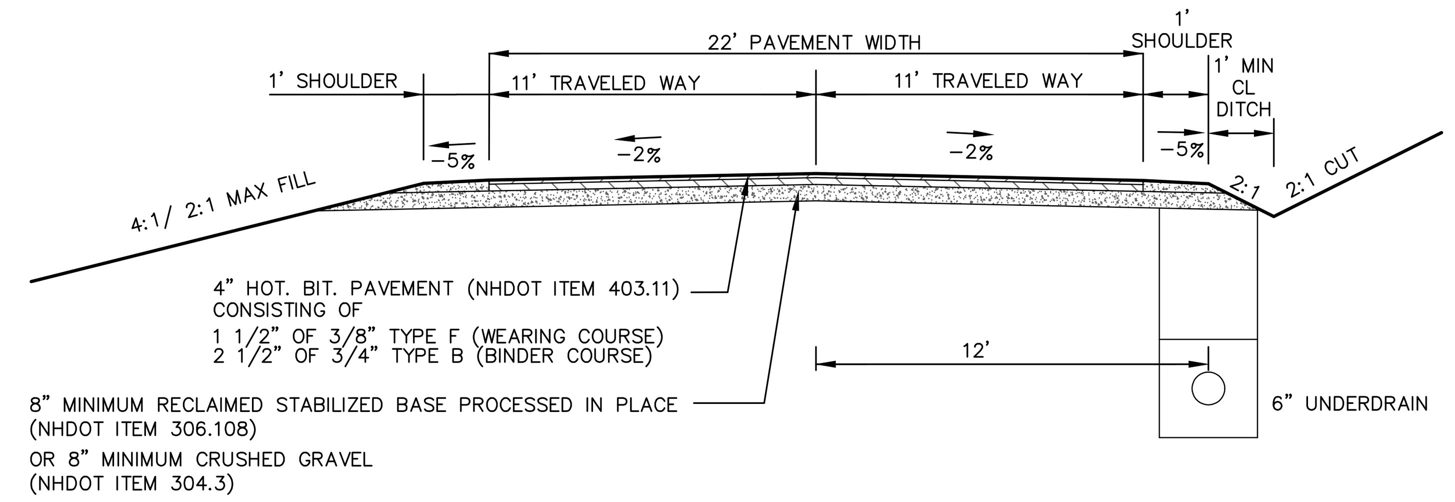


## TYPICAL ROADWAY SECTION
NOT TO SCALE

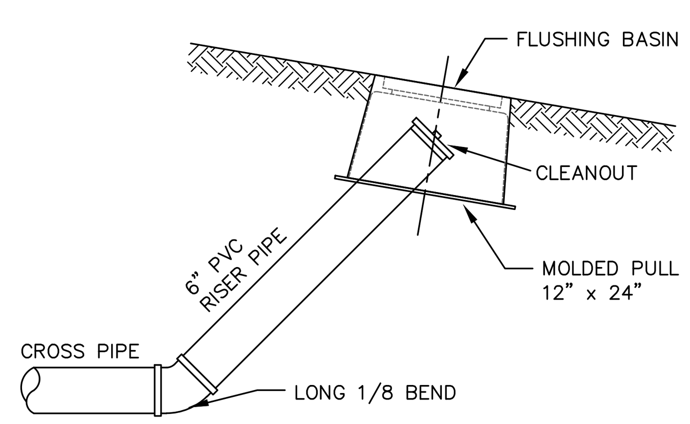


## TYPICAL UNDERDRAIN FLUSHING BASIN DETAIL
NOT TO SCALE

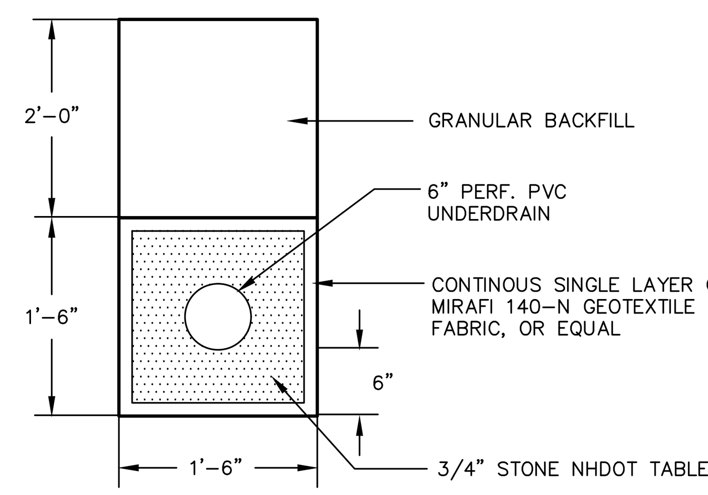


## PIPE UNDERDRAIN
NOT TO SCALE

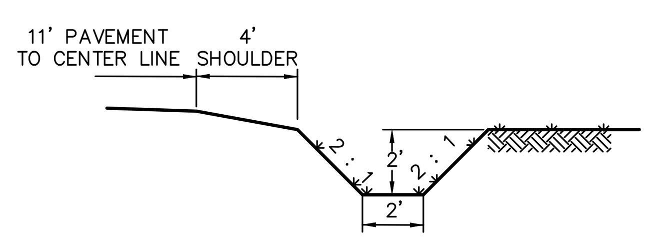


## STA 255+50 TO 259+05
## ROADSIDE DITCH DETAIL
NOT TO SCALE

## NOTES:

1. THE CONTRACTOR SHALL NOTIFY DIG SAFE 72 HOURS PRIOR TO BEGINNING CONSTRUCTION.
2. LOCATION OF EXISTING UTILITIES ARE APPROXIMATE AND SHALL BE CONFIRMED BY THE CONTRACTOR AND ANY CONFLICTS SHALL BE RESOLVED WITH APPROVAL OF ALL REGULATORY AGENCIES PRIOR TO THE COMMENCEMENT OF CONSTRUCTION.
3. COMPACTION OF MATERIAL TO BE 95% OF MODIFIED PROCTOR.
4. ALL 2:1 SLOPES TO RECEIVE 6" TOPSOIL, HYDROSEEDING & EROSION CONTROL MATT C125 BY NORTH AMERICAN GREEN OR EQUAL.
5. HYDRO SEED FOR 2:1 SLOPES SHALL CONFORM TO NHDOT "SLOPE STABILIZATION MIX"
6. IN AREAS OF THE 2:1 CUT SLOPES, WHERE LOCALIZED SLOUGHING OR FAILURE OCCURS, REMOVE EROSION CONTROL MATTING AND TOPSOIL AND EXCAVATE TO ALLOW THE INSTALLATION OF ONE FOOT (1') THICK NHDOT CLASS A RIPRAP UPON MIRAFI 600X FABRIC OR EQUAL.
7. FINAL RECLAIMED PAVEMENT/GRAVEL CROWNED FINISH GRADE TO BE LEFT 4" BELOW EXISTING GRADE TO ACCOMMODATE FOR PAVING IN 2018. PROVIDE GRADED APRONS TO ACCESS POINTS EITHER WESTERN AVENUE OR EXISTING DRIVEWAYS

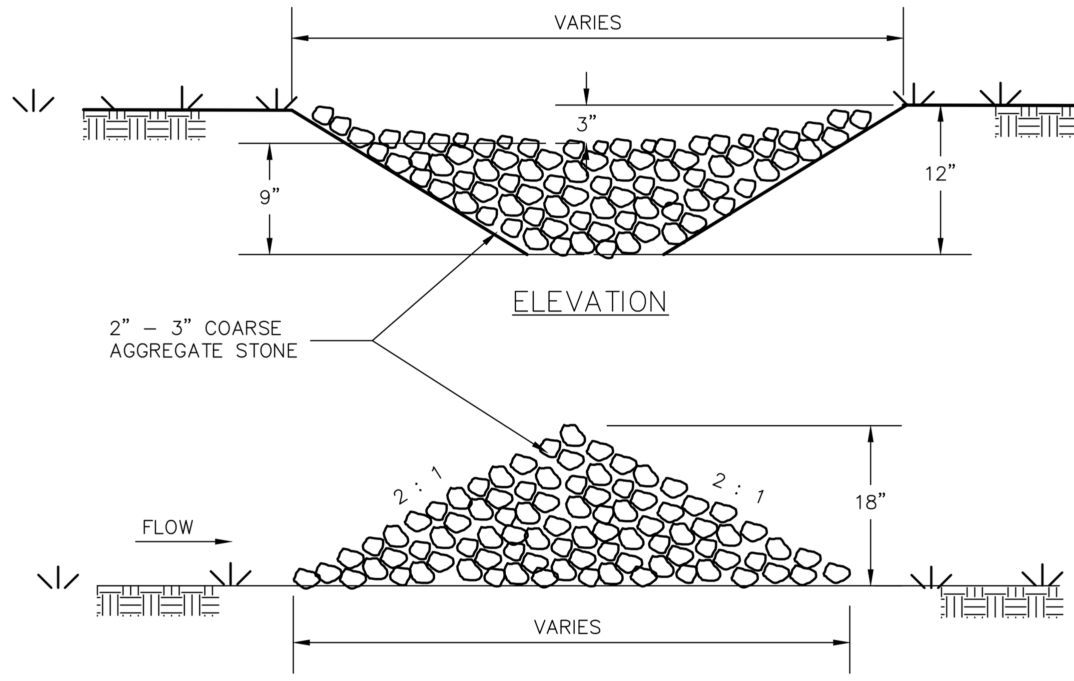


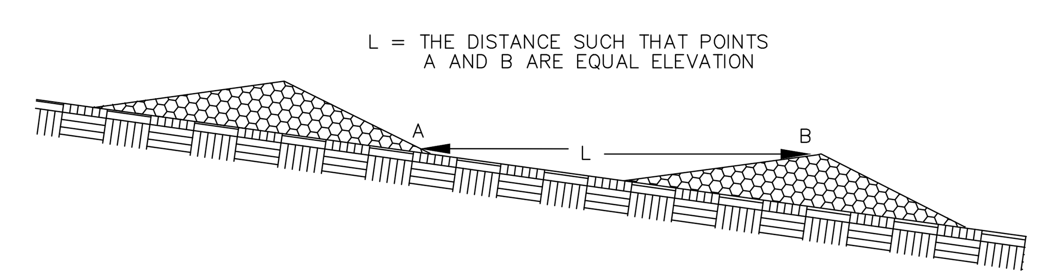


### CONSTRUCTION SPECIFICATIONS

1. CHECK DAMS SHALL BE INSTALLED ACCORDING TO THE DIMENSIONS SHOWN ON THE PLANS AT THE APPROPRIATE SPACING.

2. CONSTRUCTION OPERATIONS SHALL BE CARRIED OUT IN SUCH A MANNER SO THAT EROSION AND AIR AND WATER POLLUTION WILL BE MINIMIZED.

3. SEEDING, FERTILIZING, AND MULCHING SHALL CONFORM TO THE RECOMMENDATIONS IN THE APPROPRIATE VEGETATIVE BMP.

4. CHECK DAMS SHALL BE REMOVED FROM THE CHANNEL WHEN THEIR USEFUL LIFE HAS BEEN COMPLETED.

### MAINTENANCE

CHECK DAMS SHOULD BE CHECKED AFTER EACH RAINFALL AND AT LEAST DAILY DURING PROLONGED STORMS. ANY NECESSARY REPAIRS SHOULD BE MADE IMMEDIATELY. PARTICULAR ATTENTION SHOULD BE GIVEN TO END RUN AND EROSION AT THE DOWNSTREAM TOE OF THE CHECK DAMS. WHEN THE CHECK DAMS ARE REMOVED, THE DISTURBED PORTION SHOULD BE BROUGHT TO THE EXISTING CHANNEL GRADE AND THE AREAS PREPARED, SEEDED, AND MULCHED. WHILE THIS PRACTICE IS NOT INTENDED TO BE USED PRIMARILY FOR SEDIMENT TRAPPING, SOME SEDIMENT WILL ACCUMULATE BEHIND THE CHECK DAM. SEDIMENT SHALL BE REMOVED FROM BEHIND THE CHECK DAM WHEN IT HAS ACCUMULATED TO ONE HALF OF THE ORIGINAL HEIGHT OF THE CHECK DAM.

## STONE CHECK DAM DETAIL
-NOT TO SCALE-

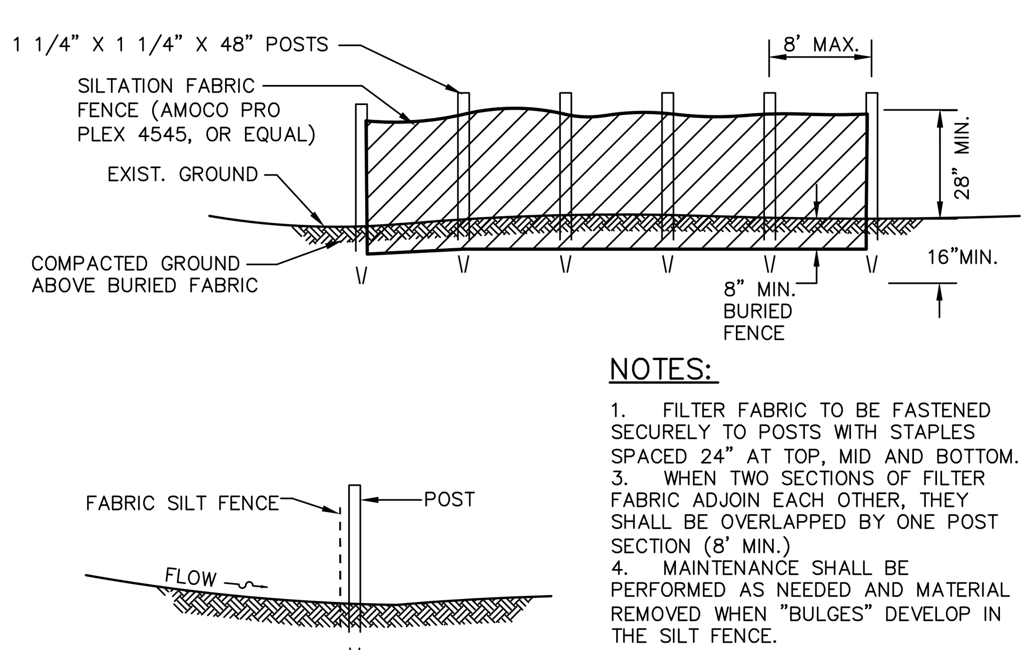


### NOTES:

1. FILTER FABRIC TO BE FASTENED SECURELY TO POSTS WITH STAPLES SPACED 24" AT TOP, MID AND BOTTOM.
3. WHEN TWO SECTIONS OF FILTER FABRIC ADJOIN EACH OTHER, THEY SHALL BE OVERLAPPED BY ONE POST SECTION (8' MIN.)
4. MAINTENANCE SHALL BE PERFORMED AS NEEDED AND MATERIAL REMOVED WHEN "BULGES" DEVELOP IN THE SILT FENCE.
5. SILT FENCE TO BE REMOVED WHEN SITE IS 85% STABILIZED.

## SILT FENCE DETAIL
NOT TO SCALE

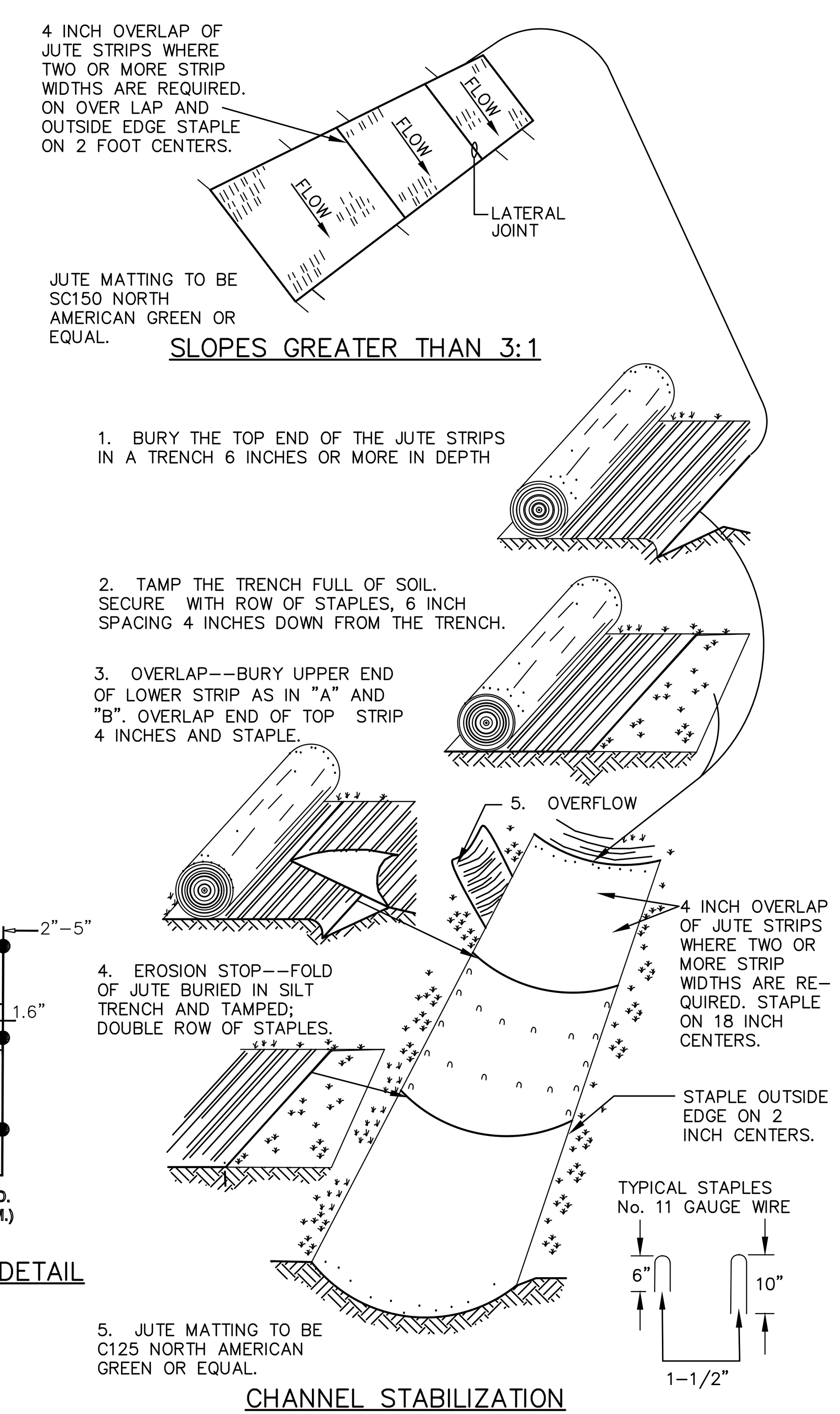


## DETAIL FOR STABILIZING WITH JUTE MATTING
NOT TO SCALE

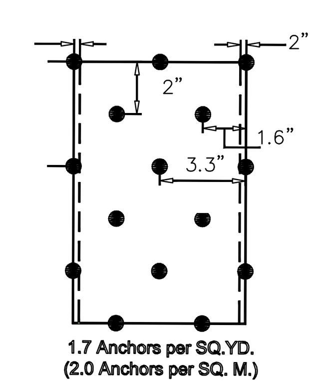


## SLOPE ANCHOR DETAIL

## CONSTRUCTION SEQUENCE

1. CONTRACTOR TO NOTIFY DIG-SAFE 72-HOURS PRIOR TO COMMENCEMENT OF CONSTRUCTION.

2. PRIOR TO GRUBBING OF CLEARED AREAS, ALL SILTATION BARRIERS DESIGNED FOR USE AS TEMPORARY EROSION CONTROL MEASURES SHALL BE INSTALLED AS CALLED FOR ON PROJECT PLANS, INCLUDING BUT NOT LIMITED TO SILT FENCE AND INLET SEDIMENT FILTERS.

3. CUT AND CLEAR TREES AND BRUSH FROM CONSTRUCTION AREAS TO THE EXTENT NECESSARY. ALL BRANCHES, TOPS AND BRUSH TO BE PROPERLY DISPOSED OF BY CONTRACTOR.

4. COMPLETE GRUBBING OPERATIONS. ALL STUMPS AND SIMILAR DEBRIS SHALL BE PROPERLY DISPOSED OF BY CONTRACTOR. ORGANIC MATERIAL SUITABLE FOR USE AS TOPSOIL SHALL BE STOCKPILED IN UPLAND AREAS. ALL STOCKPILES SHALL BE SEEDED WITH WINTER RYE AND IF NECESSARY SURROUNDED WITH HAY BALES IN ORDER TO PREVENT LOSS DUE TO EROSION.

5. CONSTRUCT TEMPORARY CULVERTS AS NECESSARY TO FACILITATE CONSTRUCTION ACTIVITIES. ALL SUCH CROSSINGS SHALL BE PROTECTED WITH SILT FENCE BARRIERS TO LIMIT EROSION.

6. STABILIZE ALL DITCHLINES PRIOR ROUGH SITE GRADING AND PRIOR TO DIRECTING FLOW INTO THEM, CONSTRUCT DRAINAGE SYSTEM AND OTHER SUBSURFACE UTILITIES.

7. COMMENCE RECONSTRUCTION OF ROADWAYS. TO THE EXTENT POSSIBLE ALL LARGE BOULDERS OVER 12" IN ANY ONE DIMENSION SHALL BE REMOVED FROM THE TRAVEL WAY AREA. ALL EXCAVATED EMBANKMENTS, DITCHES AND CULVERTS SHALL BE INSTALLED AND STABILIZED. ALL DITCHLINES SHALL BE PROTECTED FROM EROSION BY IMPLEMENTATION OF SILT FENCE BARRIERS AS SHOWN ON PROJECT PLANS. DIVERT STORMWATER RUNOFF THROUGH THE USE OF TEMPORARY CULVERTS, OR OTHER MEANS NECESSARY PRIOR TO THE COMPLETION OF A FUNCTIONAL STORM DRAINAGE SYSTEM TO THE BEST EXTENT POSSIBLE. SLOPES AND EMBANKMENTS SHALL BE STABILIZED BY TRACKING AND TEMPORARY SEEDING WITH WINTER RYE PRIOR TO TURF ESTABLISHMENT.

8. COMPLETE CONSTRUCTION OF EMBANKMENTS BY ADDING APPROPRIATE BASE MATERIALS GRADED TO PROPER ELEVATION.

9. APPLY TOPSOIL TO SLOPES AND OTHER AREAS DISTURBED BY CONSTRUCTION. TOPSOIL USED MAY BE NATIVE ORGANIC MATERIAL SCREENED SO AS TO BE FREE OF ROOTS, BRANCHES, STONES, AND OTHER DELETERIOUS MATERIALS. TOPSOIL SHALL BE APPLIED SO AS TO PROVIDE A MINIMUM OF A 4-INCH COMPACTED THICKNESS. UPON COMPLETION OF TOPSOILING, FINISHED SECTIONS ARE TO BE LIMED, SEEDED AND MULCHED. CONSTRUCTION PERSONNEL SHALL INSPECT COMPLETED SECTIONS OF WORK ON A REGULAR BASIS AND REMEDY ANY PROBLEM AREAS UNTIL A HEALTHY STAND OF GRASS HAS BECOME ESTABLISHED.

10. PERFORM FINE GRADING OF ROADWAY BASE MATERIALS.

11. INSTALL THE FINAL GRAVEL COURSE FOR ROADWAYS OVER ALL DESIGNATED AREAS.

12. COMPLETE INSTALLATION OF LANDSCAPING, SIGNAGE AND OTHER SITE AMENITIES.

13. MAINTAIN, REPAIR, AND REPLACE AS NECESSARY TEMPORARY EROSION CONTROL MEASURES UNTIL SUCH TIME AS THE ENTIRE CONSTRUCTION AREA HAS BEEN STABILIZED (A MINIMUM OF ONE WINTER SHALL HAVE PASSED).

14. AFTER STABILIZATION REMOVE AND SUITABLY DISPOSE OF TEMPORARY EROSION CONTROL MEASURES.

## EROSION CONTROL NOTES:

1. AREAS DISTURBED BY CONSTRUCTION ACTIVITIES SHALL NOT BE LEFT UNSTABILIZED FOR A PERIOD EXCEEDING 15 DAYS. ALL AREAS SHALL BE STABILIZED WITHIN 72 HOURS OF FINISH GRADE. ALL EROSION CONTROL MEASURES SHALL BE INSPECTED WEEKLY AND AFTER EVERY SUBSTANTIAL (0.5 INCHES) RAINFALL.

2. TEMPORARY EROSION CONTROL MEASURES SHALL BE INSTALLED IN ACCORDANCE WITH PROJECT PLANS. IN ADDITION, SIMILAR MEASURES SHALL BE INSTALLED WHERE AND WHEN FIELD CONDITIONS, OR FIELD OPERATIONS OF THE INDIVIDUAL SITE CONTRACTOR MAY WARRANT. ALL TEMPORARY EROSION CONTROL MEASURES USED SHALL BE PERIODICALLY INSPECTED, CLEANED, MAINTAINED AND OTHERWISE KEPT IN AN EFFECTIVE OPERATIONAL MANNER THROUGHOUT THE CONSTRUCTION PERIOD.

3. ALL DISTURBED AREAS DESIGNATED NOT TO RECEIVE PAVEMENT OR RIP RAP, SHALL RECEIVE A MINIMUM APPLICATION OF 4-INCHES OF LOAM (COMPACTED THICKNESS), PRIOR TO SEEDING AND MULCHING.

4. ALL DITCH LINES SHALL BE PERIODICALLY CLEANED OF DEPOSITED SEDIMENT SO AS TO MAINTAIN AN EFFECTIVE GRADE AND CROSS-SECTION.

5. BALED HAY USED FOR TEMPORARY EROSION CONTROL MEASURES SHALL BE DRY MOWINGS OF ACCEPTABLE HERBACEOUS GROWTH, FREE OF NOXIOUS WEEDS, DEBRIS, AND WOOD.

6. AN AREA SHALL BE CONSIDERED STABLE IF ONE OF THE FOLLOWING HAS OCCURRED:
   A. BASE COURSE GRAVELS ARE INSTALLED.
   B. A MINIMUM OF 85% VEGETATED GROWTH HAS BEEN ESTABLISHED.
   C. A MINIMUM OF 3" OF NON-EROSIVE MATERIAL SUCH AS RIP-RAP OR STONE HAS BEEN INSTALLED.
   D. EROSION CONTROL BLANKETS OR EQUAL HAVE BEEN PROPERLY INSTALLED.

7. WINTER SHUT DOWN:
   A. ALL PROPOSED VEGETATED AREAS WHICH DO NOT EXHIBIT A MINIMUM OF 85% VEGETATIVE GROWTH BY OCTOBER 15TH OR WHICH ARE DISTURBED AFTER OCTOBER 15TH, SHALL BE STABILIZED BY SEEDING AND INSTALLING EROSION CONTROL BLANKETS ON SLOPES GREATER THAN 3:1, AND SEEDING AND PLACING 3 TO 4 TONS PER ACRE, SECURED WITH ANCHORED NETTING, ELSEWHERE. THE INSTALLATION OF EROSION CONTROL BLANKETS OR MULCH AND NETTING SHALL NOT OCCUR OVER ACCUMULATED SNOW OR ON FROZEN GROUND AND SHALL BE COMPLETED IN ADVANCE OF THAW OR SPRING MELT EVENTS.
   B. ALL DITCHES AND SWALES WHICH DO NOT EXHIBIT A MINIMUM OF 85% VEGETATIVE GROWTH BY OCTOBER 15TH OR WHICH ARE DISTURBED AFTER OCTOBER 15TH, SHALL BE STABILIZED TEMPORARILY WIT STONE OR EROSION CONTROL BLANKETS APPROPRIATE FOR THE DESIGN FLOW CONDITIONS; AND
   C. AFTER NOVEMBER 15TH, INCOMPLETE ROAD OR PARKING SURFACES, WHERE WORK HAS STOPPED FOR THE WINTER SEASON, SHALL BE PROTECTED WITH A MINIMUM OF 3 INCHES OF CRUSHED GRAVEL PER NHDOT ITEM 304.3.

8. DUST SHALL BE CONTROLLED BY THE USE OF WATER AND/OR SWEEPING AS NECESSARY THROUGHOUT THE CONSTRUCTION PERIOD.

9. IN NO WAY ARE THOSE TEMPORARY EROSION CONTROL MEASURES INDICATED ON THESE PLANS TO BE CONSIDERED ALL INCLUSIVE. THE CONTRACTOR SHALL USE JUDGMENT IN INSTALLING SUPPLEMENTARY EROSION CONTROL MEASURES WHERE AND WHEN SPECIFIC SITE CONDITIONS AND/OR CONSTRUCTION METHODOLOGIES MAY WARRANT.

10. AN AREA SHALL BE CONSIDERED STABLE IF ONE OF THE FOLLOWING HAS OCCURRED:
   - -BASE COURSE GRAVELS HAVE BEEN INSTALLED IN AREAS TO BE PAVED
   - -A MINIMUM OF 85 PERCENT VEGETATED GROWTH HAS BEEN ESTABLISHED
   - - A MINIMUM OF 3 INCHES OF NON-EROSIVE MATERIAL SUCH STONE OR RIPRAP HAS BEEN INSTALLED OR, EROSION CONTROL BLANKETS HAVE BEEN PROPERLY INSTALLED.

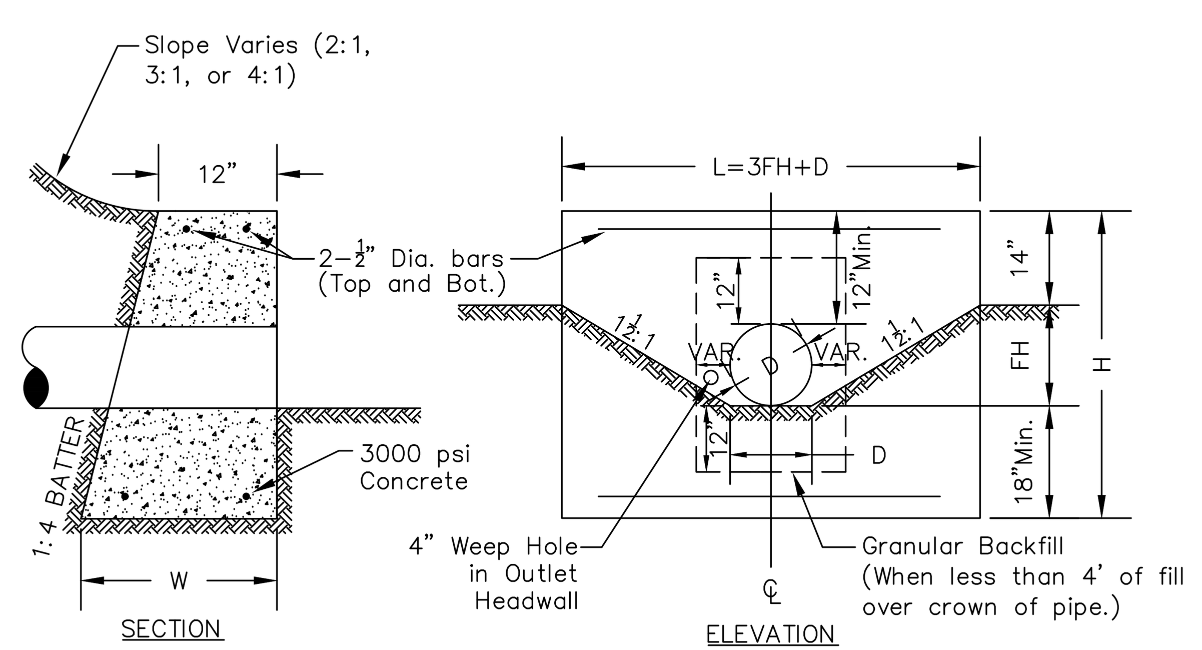


| Dia. D (IN.) | Area of Pipe (Sq. ft.) | Gran Fill (Cu. Yd) Per Lin. Ft. | HDR. Length L | HDR. Height H | Fill Height FH | Width at Bot. of HDR. W |
|---|---|---|---|---|---|---|
| 12 | 0.79 | 0.30 | 3'-6" | 3'-6" | 0'-10" | 1'-10½" |
| 15 | 1.23 | 0.35 | 4-6 | 3-9 | 1-1 | 1-11¼ |
| 18 | 1.77 | 0.39 | 5-6 | 4-0 | 1-4 | 2-0 |
| 24 | 3.14 | 0.48 | 7-6 | 4-6 | 1-10 | 2-1½ |

## TYPICAL CONCRETE HEADWALL, NO WINGS
NOT TO SCALE

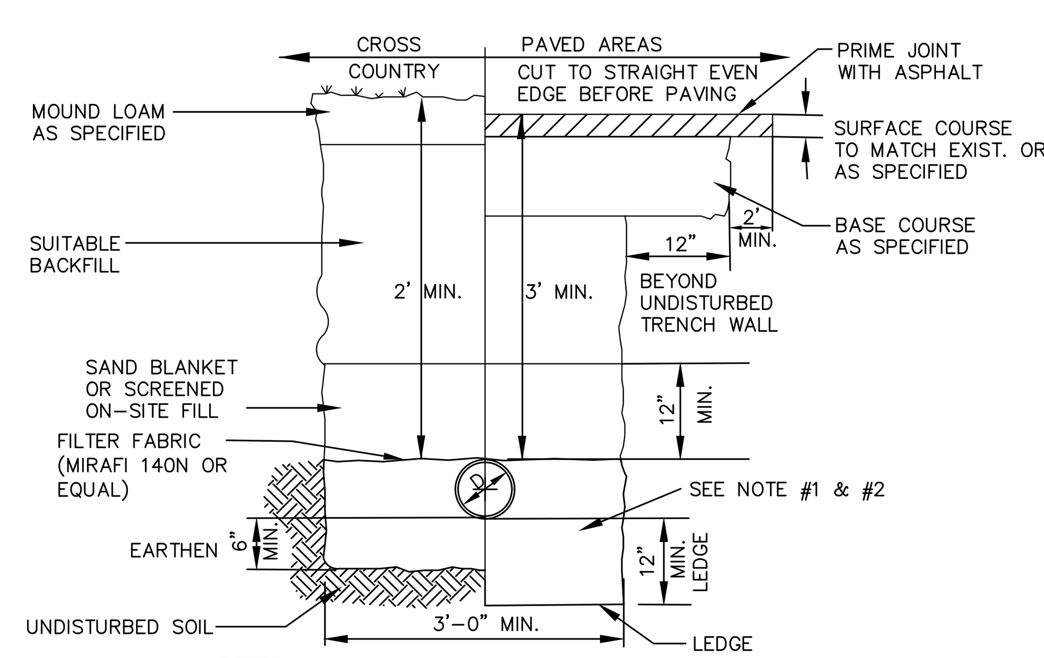


### NOTES

1. FOR HDPE PIPE BEDDING SHALL BE 3/4" STONE TO THE CROWN OF THE PIPE

2. ALL BACKFILL, SELECT GRAVELS AND AGGREGATES SHALL BE COMPACTED TO 95% MODIFIED PROCTOR DENSITY.

## TYPICAL STORM DRAINAGE TRENCH DETAIL
NOT TO SCALE

STATE OF NEW HAMPSHIRE - JENNIFER B. McCOURT No. 8133 - LICENSED PROFESSIONAL ENGINEER - 11/21/16

REVISIONS:

| # | DATE | DESCRIPTION | BY |
|---|---|---|---|
| 1 | 11/21/16 | ADD PAVEMENT | JBM |

CONSTRUCTION DETAILS
# WESTERN AVENUE RECONSTRUCTION
COTE HILL ROAD TO PATTERSON ROAD EXTENSION
HENNIKER, NH

OWNER: TOWN OF HENNIKER
18 DEPOT STREET
HENNIKER, NH 03242

SURVEYOR:
J.E. BELANGER LAND SURVEYING PLLC
LICENSED LAND SURVEYOR
61 OLD HOPKINTON ROAD, DUNBARTON, NH 03046
* BOUNDARY SURVEYS
* SUBDIVISIONS
* LAND PLANNING
* SEPTIC DESIGN
TEL (603) 774-3601

ENGINEER:
McCOURT ENGINEERING ASSOCIATES, PLLC
Civil Engineering & Land Planning
42 Ezekiel Smith Road, Henniker, NH 03242
mccourtengineering@tds.net
(603) 428-6682

PROJECT NO. 215-0814-1 | DATE: 05/30/16 | NOT TO SCALE | SHEET 10 OF 11

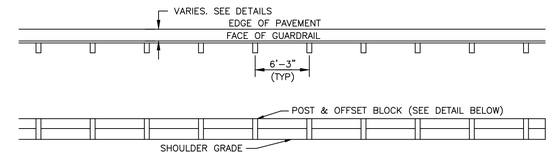


NHDOT ITEM NO. 606.12 BEAM GUARDRAIL, STEEL POST (STANDARD SECTION)

## STANDARD SECTION GUARD RAIL
NOT TO SCALE

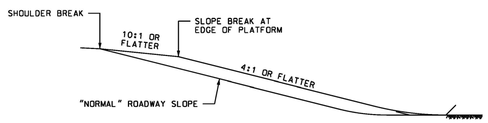


*SECTION A-A*
*PLATFORM SLOPE GRADING*

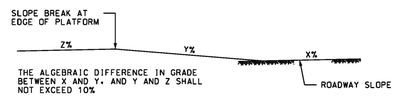


X: LONGITUDINAL GRADE OF ROADWAY SLOPE IN ADVANCE OF PLATFORM
Y: LONGITUDINAL GRADE OF PLATFORM APPROACH
Z: LONGITUDINAL GRADE OF PLATFORM

*SECTION B-B*
*PLATFORM APPROACH GRADING*

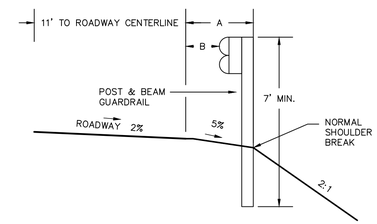


| STATION | A (FT) | B (FT) |
|---|---|---|
| 200+25 TO 230+00 | 2.5 | 1.5 |
| 230+00 TO 230+25 | TRANSITION | TRANSITION |
| 230+25 TO 266+50 | 5 | 4 |

## TYPICAL GUARDRAIL DETAIL
–NOT TO SCALE–

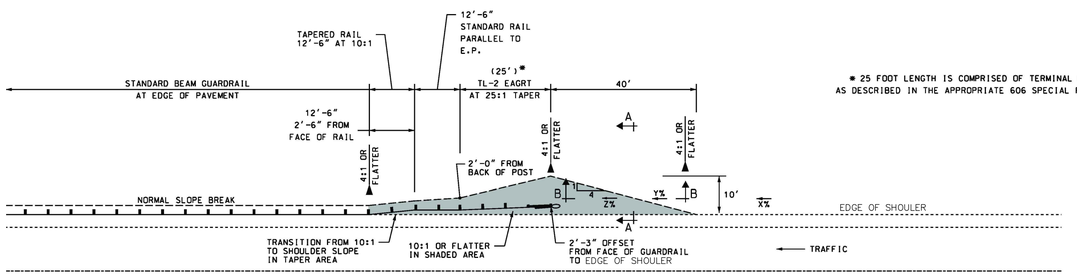


* 25 FOOT LENGTH IS COMPRISED OF TERMINAL LENGTH AS DESCRIBED IN THE APPROPRIATE 606 SPECIAL PROVISION

## NHDOT GUARDRAIL 25' TL-2 EAGRT UNIT DETAIL
–NOT TO SCALE–

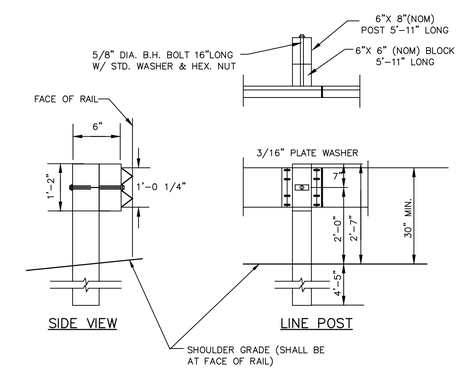


NOTES:

1. ANCHORS, PLATES AND ALL FITTINGS TO BE GALVANIZED.
2. ALL DIMENSIONS SUBJECT TO MANUFACTURING TOLERANCES.
3. RAIL PANELS AND END SECTIONS TO BE 12" CORROSION RESISTANT STEEL.
4. WHEN GUARD RAIL IS SET BEHIND CURB, USE FINISHED PAVEMENT GRADE AT FACE OF CURB. WHEN GUARD RAIL IS SET 2.5' AND BEYOND USE GRADE AT FACE OF GUARD RAIL.

## PLAN FOR STEEL POST & OFFSET BLOCK
NOT TO SCALE

STATE OF NEW HAMPSHIRE
JENNIFER B. McCOURT
No. 8133
LICENSED
PROFESSIONAL ENGINEER
5/27/16

REVISIONS:

| # | DATE | DESCRIPTION | BY |
|---|---|---|---|
| | | | |

GUARDRAIL DETAILS
# WESTERN AVENUE RECONSTRUCTION
COTE HILL ROAD TO PATTERSON ROAD EXTENSION
HENNIKER, NH

OWNER: TOWN OF HENNIKER
18 DEPOT STREET
HENNIKER, NH 03242

SURVEYOR:
J.E. BELANGER LAND SURVEYING PLLC
LICENSED LAND SURVEYOR
BELANGER LAND SURVEYING AND CONSTRUCTION, NH 03046
* BOUNDARY SURVEYS
* SUBDIVISIONS
* LAND PLANNING
* SEPTIC DESIGN
TEL: (603) 774-3601

ENGINEER:
McCOURT ENGINEERING ASSOCIATES, PLLC
Civil Engineering & Land Planning
42 Ezekiel Smith Road,Henniker, NH 03242
mccourtengineering@tds.net
(603) 428-6682

PROJECT NO. 215-0814-1 | DATE: 05/30/16 | NOT TO SCALE | SHEET 11 OF 11